Zone Synthetic

Patlatılmış Görünüm / Exploded View

Please explicitly specify following information when ordering spare parts;
1) **"Part Code"** that's seen in this drawing
2) **"Draw Date"** of this exploded view (on the right top corner of the page)
3) **"Caliber"** information for parts with an "*"

Drawn On: Apr 17th, 2023
Resim Tarihi: 17 Nisan 2023

* Please explicitly specify **Caliber** when ordering following parts;
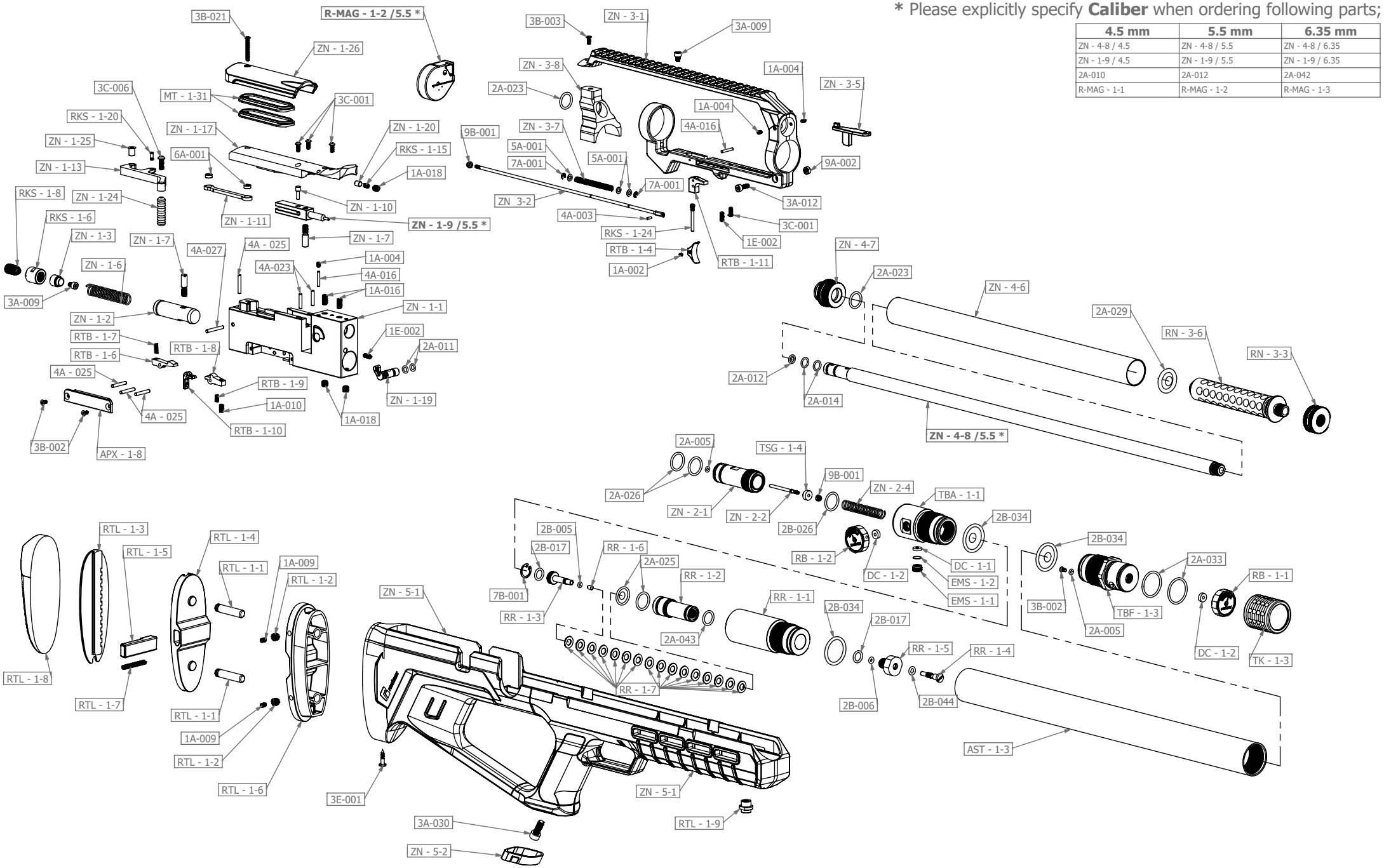
4.5 mm	5.5 mm	6.35 mm
ZN - 4-8 / 4.5	ZN - 4-8 / 5.5	ZN - 4-8 / 6.35
ZN - 1-9 / 4.5	ZN - 1-9 / 5.5	ZN - 1-9 / 6.35
2A-010	2A-012	2A-042
R-MAG - 1-1	R-MAG - 1-2	R-MAG - 1-3